THIRD ANGLE PROJECTION	FOR GUIDANCE ONLY THIS IMFORMATION HAS BEEN PROVIDED IN GOOD FAITH BUT SPECIFICATIONS DO CHANGE	EDITION 20171122	Date 2017/11/22	Scale 1:1 @ A4

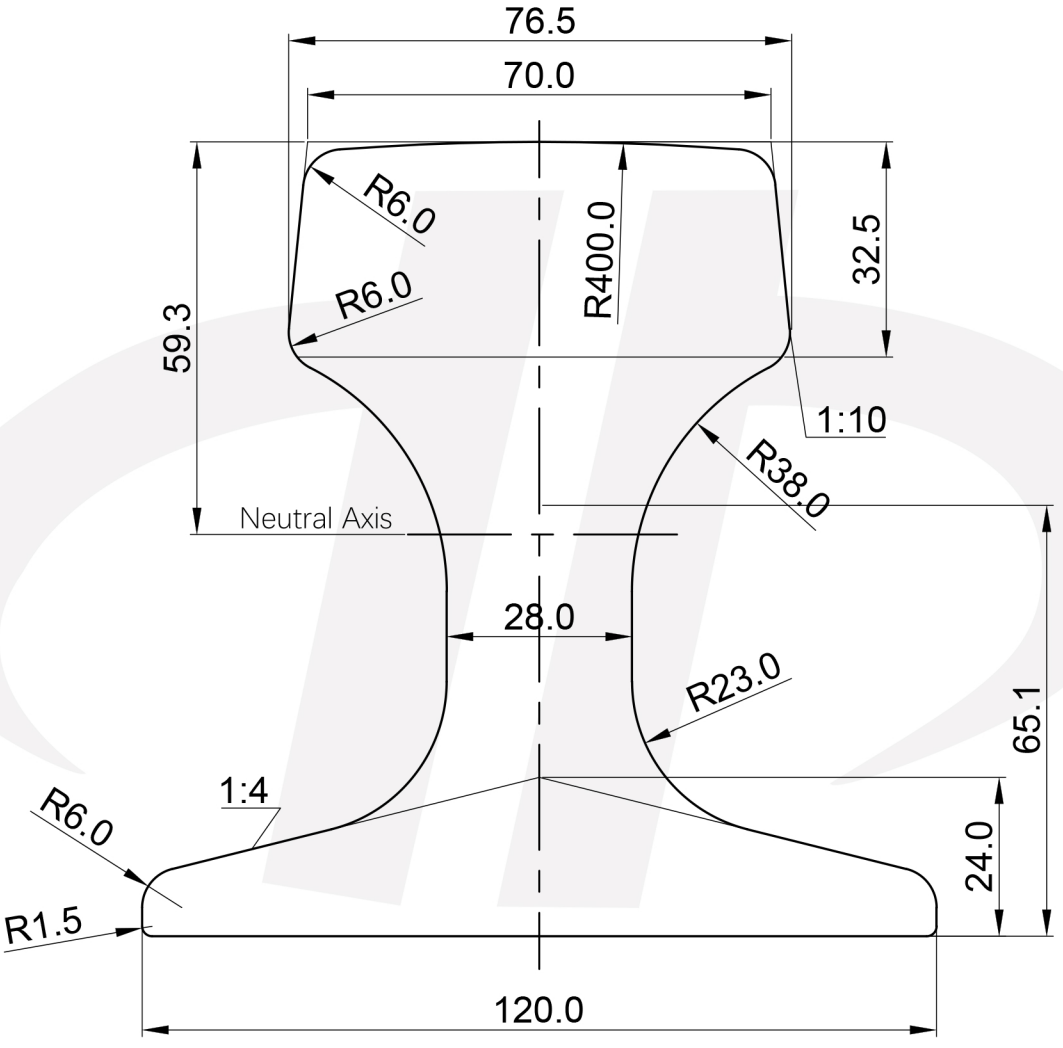

Note: The drawing specifications are drawn by AutoCAD software and are accurate at the time of this drawing issue. These figures may differ slightly from those published in the standard for the rail

ZX STEEL GROUP ®

The technical date contained in this drawing is the property of **Henan Zongxiang Heavy Industry Import & Export Co., Ltd**

Henan Zongxiang Heavy Industry Import & Export Co., Ltd

Address: No. 2234, 22nd Floor, No. 1 Mall, Shangdu Road, Zhengzhou New District, Zhengzhou, Henan Province, China.
Tel：+86 371 53396695
+86 17737153210
Web：www.zxsteelrail.com
Email：zxsteel@zxsteelgroup.com

Rail Designation	QU 70
Rail Origin	CHINA
Standard	YB/T 5055-93
Area of section	67.30 cm²
Calculated Mass	52.80 kg/m
Material	U71Mn
Length	